Edge Distributed Power Architecture

- SAVE THESE INSTRUCTION - This documents contains important safety and operating instructions for CP power shelves
- Equipment is intended for installation only in restricted access areas
- Rules and regulations - Follow all national and local rules and regulations when making field connections.
- This equipment is not suitable for use in locations where children are likely to be present.

- CONSERVEZ CES INSTRUCTIONS - Ce document contient des instructions de sécurité et d'utilisation importantes pour les étagères d'alimentation CP
- L'équipement est destiné à être installé uniquement dans des zones à accès restreint
- Règles et réglementations - Suivez toutes les règles et réglementations nationales et locales lors des connexions sur le terrain.
- Cet équipement n'est pas adapté à une utilisation dans des endroits où des enfants sont susceptibles d'être présents.

Document: 8600235117P

2023 OmniOn power Inc. All rights reserved.

Content

Safety Statements....5
Precautions....5
Hazards....6
Énoncés de sécurité....7
Précautions....8
Risques....9
Commissioning Guide....9
Edge Distributed Power Frame Overview....10
Unpacking the Edge and its Components....12
Parts Checklist....12
Operating/Storing the Units....12
Removing Enclosure to Pallet Anchor Bolts....13
Lowering Leveling Feet....13
Raising the Leveling Feet....13
Guide to Floor....13
Step 1 - Frame Mounting....14
Isolation Pads and Shim Kits....15
Step 2A - Frame Grounding (*)....15
Step 2B - DC Bus Grounding (**)....16
Step 3 - Connect AC Input....16
Step 3A - 480 V_{AC} Input connection....17
Step 3B - 208 V_{AC} Input connection....18
Step 4 - Unpacking Battery Modules....19
Step 5A - Install Battery Modules....20
Step 5B - Field Installation Instructions for Horizontal Oriented Battery Shelves....21
Edge Battery Shelf ID Numbering....22
Edge Battery Module LED Status....23
Edge Battery Module Operating voltages....23
Step 6 - Set Jumper - LAN Port per Galaxy Pulsar Edge Controller....24
Step 7 - Install Controllers per Galaxy Pulsar Edge Controller Quick Start Guide....24
Step 8 - Controller I/O Access....25
Step 9 - Install Rectifiers....26
Step 10 - Install Edge “G4xx” Series Plug-In PDU’s (Power Distribution Units)....27
Step 11 - FAJ Alarm wiring....28
Step 12 - G401 PDU Load Breaker and Cable Sizing....28
Step 13 - G411 Connect DC Power to End Users’ Equipment....30
Step 14 - User Equipment Adjustable Rack Space....33

2023 OmniOn power Inc. All rights reserved.

Content

Step 15 - Customer Cable Access 33
Step 16 - Initial Start Up 34
Step 16A - Initial Start Up for Equipment Loads 34
Step 17 - Configure Controller per Galaxy Pulsar Edge Controller Quick Start Guide 35
Ordering Information 35
Customer Service and Technical Support Information 35
Blank 36
Disclaimer 37

List of Figures

Figure 1 Power Architecture Block Diagram 10
Figure 2 Edge System Components 11
Figure 3 Ramp Deck Screws 13
Figure 4 Pallet Anchor Bolts 13
Figure 5 Lowering Leveling Feet 13
Figure 6 Raising Leveling Feet 13
Figure 7 Mounting Dimensions 14
Figure 8 Kick Plate Screws 14
Figure 9A EDGE Isolation Plate Kit – 1600305789A 15
Figure 9B EDGE Cabinet Shim Kit – 1600305805A 15
Figure 10 Side A/B Defined and Frame Grounding 15
Figure 11 Internal ground Bar 16
Figure 12 Rectifier stick configuration 16
Figure 13 AC input connection 17
Figure 14 Connector 17
Figure 15 Punch conduit holes in cover 18
Figure 16 Ground wire connections 18
Figure 17 VRLA Battery Module Test Points 19
Figure 18 A/B Battery Module Installation 20
Figure 19 1U Horizontal Battery Shelf Assembly 20
Figure 20 24 Position Battery Tray Asm. 20
Figure 21 Front Rack Mounting Screws 21
Figure 22 Rack Extension Glides 21
Figure 23 Battery PDU 21
Figure 24 A/B Cable lead dress 21

2023 OmniOn power Inc. All rights reserved.

List of Figures

Figure 25 Shelf to shelf, shelf to edge cabling for communications and battery shelves connection to ground bar 22
Figure 26 Shelf ID Numbering Switches 22
Figure 27 Controller settings 24
Figure 28 A/B Side Controller Installation 24
Figure 29 I/O Interface Board 25
Figure 30 Rectifier Module Installation 26
Figure 31 PDU Locations 27
Figure 32 FAJ Alarm connections 28
Figure 33 PDU G401 28
Figure 34 PDU Installation 29
Figure 35 PDU with breakers 29
Figure 36A G411 View 31
Figure 36B Breaker 31
Figure 37 View of PDU - G411 32
Figure 38 Adjustable Rack Rails 33
Figure 39 Wiring Trays for cable access 33
Figure 40 Front panel of controller 34

List of Tables

Table 1 Branch protection ratings 17
Table 2 AC Wiring Chart 17
Table 3 Weight and measure of batteries 19
Table 4 Battery Shelf ID Switch Positions 22
Table 5 LED status for battery modules 23
Table 6 Battery module operating voltages 23
Table 7 Controller Jumper Settings 24
Table 8 Input / Output Alarms / Digital Ports 26
Table 9 PDU Internal Wiring Recommendation & Field Assembled load cable connectors with Pins 29
Table 10 Pre-terminated Factory Cables 30

2023 OmniOn power Inc. All rights reserved.

Safety Statements

- Do not install this equipment within combustible areas.
- Recalculate maximum user load by subtracting the number of populated battery trays installed, at 51 lbs. per tray, from the marked rating of the cabinet load. Please note that each hole of the mounting brackets is rated for a maximum 10.8 lbs.
- Rules and Regulations – Follow all national and local rules and regulations when making field connections.
- Compression Connectors
- U. S. or Canada installations – use Listed/Certified compression connectors to terminate Listed/Certified field-wire conductors.
- All installations - apply the appropriate connector to the correct size conductor as specified by the connector manufacturer, using only the connector manufacturer's recommended or approved tooling for that connector.
- Electrical Connection Securing: Torque to the values specified on labels or in the product documentation.
- Cable Dress – Dress to avoid damage to the conductors and undue stress on the connectors.
- Circuit Breakers and Fuses
- Use only those specified in the equipment ordering guide.
- Size as required by the National Electric Code (NEC) and/or local codes.
- Safety Tested Limits – Refer to the equipment ratings to assure current does not exceed:
  Maximum Load – 80% of protector rating.
- Field-wired Conductors – Follow all National Electric Code (NEC) and local rules and regulations.
- Insulation rating: 90°C minimum; 105°C (minimum) if internal to enclosed equipment enclosures.
- Size AC field-wired conductors with 75°C ampacity (NEC) equal to or greater than their panel board circuit breaker rating.
- Size DC field-wired conductors with 75°C ampacity (NEC) equal to or greater than circuit breaker/fuse rating.
- AC and DC input disconnect/protection – Provide accessible devices to remove input power in an emergency.
- Alarm Signals – Provide external current limiting protection. Rating 60V, 0.5A unless otherwise noted.
- Grounding – Connect the equipment chassis directly to ground. In enclosed equipment enclosures connect to the enclosure AC service ground bus. In huts, vaults, and central offices connect to the system bonding network.

2023 OmniOn power Inc. All rights reserved.

Énoncés de sécurité

- N'installez pas cet équipement dans des zones combustibles.
- Recalculez la charge maximale de l'utilisateur en soustrayant le nombre de plateaux de batterie installés, à 51 lb. par plateau, à partir de la valeur nominale indiquée de la charge de l'armoire. Veuillez noter que chaque trou des supports de montage est évalué pour un maximum de 10.8 lb.
- Règles et règlements – Suivez toutes les règles et règlements nationaux et locaux lors de l'établir des connexions sur le terrain.
- Connecteurs de compression
- Installations américaines ou canadiennes – utilisez des connecteurs de compression répertoriés/certifiés pour mettre fin aux conducteurs de câbles de campagne énumérés/certifiés.
- Toutes les installations – appliquer le connecteur approprié au conducteur de taille correcte tel que spécifié par le fabricant de connecteur, en utilisant uniquement l'outillage recommandé ou approuvé du fabricant de connecteur pour ce connecteur.
- Sécurisation de la connexion électrique: couple aux valeurs spécifiées sur les étiquettes ou dans la documentation du produit.
- Robe de cable – robe pour éviter des dommages aux conducteurs et le stress indu sur les connecteurs.
- Disjoncteurs et fusibles
- N'utilisez que ceux spécifiés dans le guide de commande de l'équipement.
- Taille exigée par le Code National Électrique (NEC) et/ou les codes locaux.
- Limites de sécurité testées – Reportez-vous aux cotes de l'équipement pour vous assurer que le courant ne dépasse pas : Charge maximale - 80 % de la puissance nominale du protecteur.
- Conducteurs câblés sur le terrain – Suivez tous les codes nationaux électriques (NeC) ainsi que les règles et règlements locaux.
- Note d'isolation: 90°C minimum; 105°C (minimum) si interne à des armoires d'équipement fermées.
- Conducteurs câblés sur le terrain de taille AC avec une amacité de 75°C (NEC) égale ou supérieure à leur cote de disjoncteur de panneau.
- Conducteurs câblés sur le terrain de taille DC avec une amacité de 75°C (NEC) égale ou supérieure à la cote disjoncteur/fusible.
- Déconnexion/protection des entrées AC et DC – Fournir des dispositifs accessibles pour supprimer la puissance d'entrée en cas d'urgence.
- Signaux d'alarme – Fournir une protection externe limitant le courant. Note 60V, 0.5A sauf indication contraire.
- Mise à la terre – Connectez le châssis de l'équipement directement au sol. Dans les armoires d'équipement fermées se connectent à l'autobus au sol de service de l'armoire AC. Dans les huttes, les voûtes et les bureaux centraux se connectent au réseau de liaison du système.

2023 OmniOn power Inc. All rights reserved.

Precautions

- Install, service, and operate equipment only by professional, skilled and qualified personnel who have the necessary knowledge and practical experience with electrical equipment and who understand the hazards that can arise when working on this type of equipment.
- Disconnect batteries from outputs and/or follow safety procedures while working on equipment. Batteries may be connected in parallel with the output of the rectifiers. Turning off the rectifiers will not necessarily remove power from the bus.
- Do not disconnect permanent bonding connections unless all power inputs are disconnected.
- Verify that equipment is properly safety earth grounded before connecting power. High leakage currents may be possible. The maximum ground conductor current that may be present is 78 mA.
- Exercise care and follow all safety warnings and practices when servicing this equipment. Hazardous energy and voltages are present in the unit and on the interface cables that can shock or cause serious injury.
- Follow all warning and precautionary battery instructions, including proper replacement and disposal procedures, to minimize risk of injury. External batteries, if applicable, are to be installed in accordance with all national and local rules and regulations, including CEC, part 1.
- Use the following precautions in addition to proper job training and safety procedures:
    - Use only properly insulated tools.
    - Remove all metallic objects (key chains, glasses, rings, watches, or other jewelry).
    - Follow Lock Out Tag Out (LOTO) procedures: customer specified, site specific, or general as appropriate. Disconnect all power input before servicing the equipment. Check for multiple power inputs.
    - Wear safety glasses.
    - Follow Personal Protective Equipment requirements: Customer specified, site specific, or general as appropriate.
    - Test circuits before touching.
    - Be aware of potential hazards before servicing equipment.
    - Identify exposed hazardous electrical potentials on connectors, wiring, etc.
    - Avoid contacting circuits when removing or replacing covers.
    - Use a personal ESD strap when accessing or removing electronic components.
- Personnel with electronic medical devices need to be aware that proximity to DC power and distribution systems, including batteries and cables, typically found in telecommunications utility rooms, can affect medical electronic devices, such as pacemakers. Effects decrease with distance.

2023 OmniOn power Inc. All rights reserved.

Précautions

- Installer, entretenir et faire fonctionner l'équipement uniquement par du personnel professionnel, qualifié et qualifié qui possède les connaissances et l'expérience pratique nécessaires avec l'équipement électrique et qui comprend les dangers qui peuvent survenir lorsqu'on travaille sur ce type de équipement.
- Débranchez les piles des sorties et/ou suivez les procédures de sécurité pendant le travail sur l'équipement. Les batteries peuvent être connectées en parallèle avec la sortie des rectifiers. L'arrêt des rectificateurs ne supprimera pas nécessairement l'alimentation de l'autobus.
- Ne déconnectez pas les connexions de liaison permanentes à moins que toutes les entrées d'alimentation ne soient déconnectées.
- Vérifier que l'équipement est correctement la terre de sécurité mise à la terre avant de connecter la puissance. Des courants de fuite élevés peuvent être possibles. Le courant maximum du conducteur de terre pouvant être présent est de 78 mA.
- Faites preuve de prudence et suivez tous les avertissements et pratiques de sécurité lors de l'entretien de cet équipement. L'énergie et les tensions dangereuses sont présentes dans l'unité et sur les câbles d'interface qui peuvent choquer ou causer des blessures graves. Lorsqu'elles sont équipées de modules de sonnerie, des tensions dangereuses seront présentes sur les connecteurs de sortie de la sonnerie.
- Suivez toutes les instructions d'avertissement et de précaution relatives à la batterie, y compris les procédures de remplacement et d'élimination appropriées, afin de minimiser les risques de blessures. Les batteries externes, le cas échéant, doivent être installées conformément à toutes les règles et réglementations nationales et locales, y compris CEC, partie 1.
- Prendre les précautions suivantes en plus de la formation professionnelle et des procédures de sécurité appropriées :
  - N'utilisez que des outils correctement isolés.
  - Enlever tous les objets métalliques (porte-clés, lunettes, bagues, montres ou autres bijoux).
  - Suivre les procédures de Lock Out Tag Out (LOTO): spécifiée par le client, spécifique au site ou générale, le cas échéant.
  - Débranchez toutes les entrées de puissance avant d'entretenir l'équipement. Vérifiez s'il y a plusieurs entrées d'alimentation.
  - Portez des lunettes de sécurité.
  - Respecter les exigences relatives à l'équipement de protection personnelle: spécifiée par le client, spécifique au site ou générale, le cas échéant.
  - Testez les circuits avant de toucher.
  - Soyez conscient des dangers potentiels avant d'entretenir l'équipement.
  - Identifier les potentiels électriques dangereux exposés sur les connecteurs, le câblage, etc.
  - Éviter de contacter les circuits lors de l'enlèvement ou du remplacement des couvercles.
  - Utilisez une sangle PERSONNELLE DEO lorsque vous accédez ou retirez des composants électroniques.
- Le personnel muni d'appareils médicaux électroniques doit être conscient que la proximité des systèmes d'alimentation et de distribution DeC, y compris les piles et les câbles, généralement présents dans les salles de services publics de télécommunications, peut affecter les appareils électroniques médicaux, comme les stimulateurs cardiaques. Les effets diminuent avec la distance.

2023 OmniOn power Inc. All rights reserved.

Warning Label Definitions

Hazards

Explosion Hazard

- Battery module(s) ambient temperature not to exceed 40°C.
- The maximum battery voltage (float or boost) cannot exceed $58V_{DC}$.
- Risk of explosion if battery module is replaced by incorrect type.
- Dispose of used battery modules according to manufacturer's instructions.

Définitions des étiquettes d'avertissement

Risques

Risque d'explosion

- La température ambiante des modules de batterie ne doit pas dépasser 40°C.
- La tension maximale de la batterie (flotteur ou boost) ne peut pas dépasser $58V_{DC}$.
- Risque d'explosion si le module de batterie est remplacé par un type incorrect.
- Disposer des modules de batterie usagés selon les instructions du fabricant.

Shock Hazard

- Multiple sources are present: Disconnect all AC and DC external connections and remove battery modules prior to removing the cabinet.

Risque d'électrocution

- Plusieurs sources sont présentes : déconnectez toutes les connexions externes AC et DC et retirez les modules de batterie avant de retirer l'armoire.

2023 OmniOn power Inc. All rights reserved.

Edge Distributed Power Frame Overview

Thank you for purchasing and beginning the install of the Edge distributed power frame. The highly reliable Edge distributed power architecture provides a cost-effective solution to backup power needs in data centers by utilizing compact DC power supplies mounted inside – on the side (vertically) – of each frame. Each power train is fed from a three-phase 208/480 - volt AC source and converts the power to 48-volts DC inside the enclosure using true three-phase 208/480V_{AC} to 48V_{DC} compact rectifier modules. The 48V_{DC} is then distributed to Power Distribution Units (PDUs) for load distribution and charging local vertically mounted as well as optional horizontal mounted battery reserve housed in the equipment space. In typical dual A and B system power stick configurations each system is managed by its own Pulsar Edge controller that manages all the power components within its power ecosystem. System power sticks are available in a variety of configuration options. Remote access to digital and discrete information is through independent system A and B Input/Output boards located at the rear of the frame in the power stick area. With the Edge data center power architecture, rectifiers, batteries, controllers, and other accessories are hot-swappable and self-recognized and configured.

The Edge power architecture can be implemented in full, dual N+N redundant or single N+1 redundant configurations. The dual N+N variant of the data center power architecture features full dual-redundancy of the power trains – including rectifiers, batteries, controllers and dual, separate 480-volt AC utility feeds. In comparison, the N+1 redundancy architecture features a single AC utility feed with an N+1 rectifier configuration. The Edge distributed power architecture is an evolving architecture with new configurations and components. Consult 24/7 technical support for latest information.

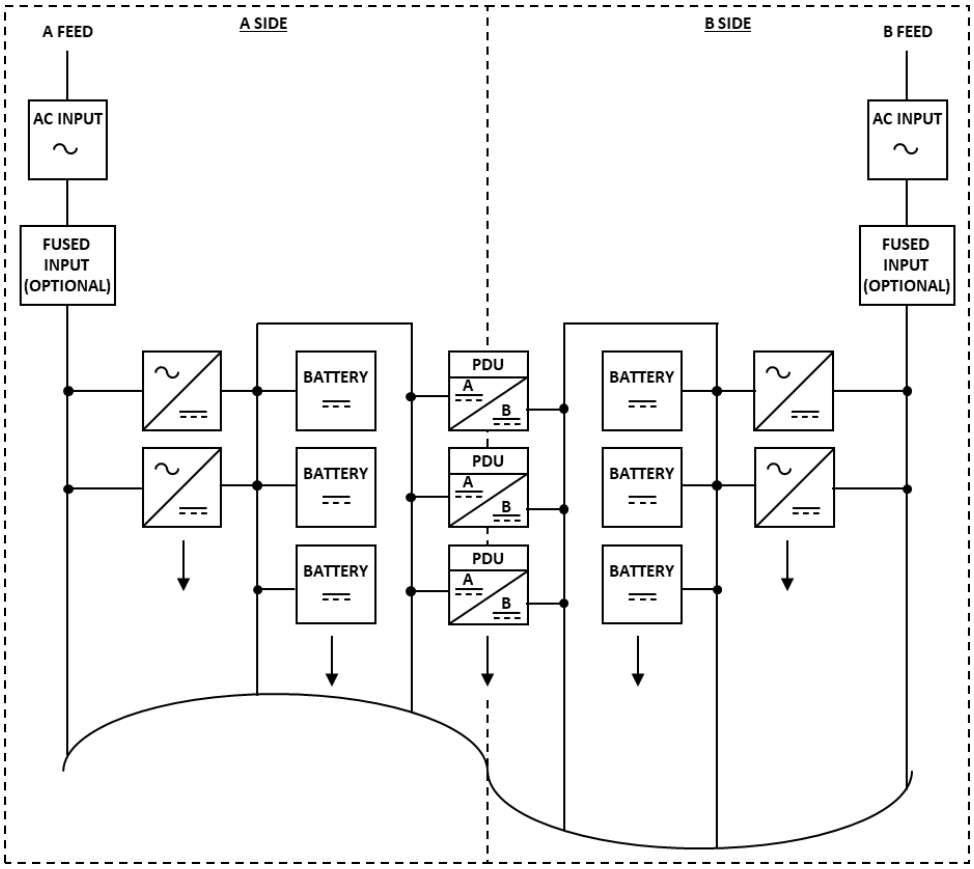

Figure 1 Power Architecture Block Diagram

2023 OmniOn power Inc. All rights reserved.

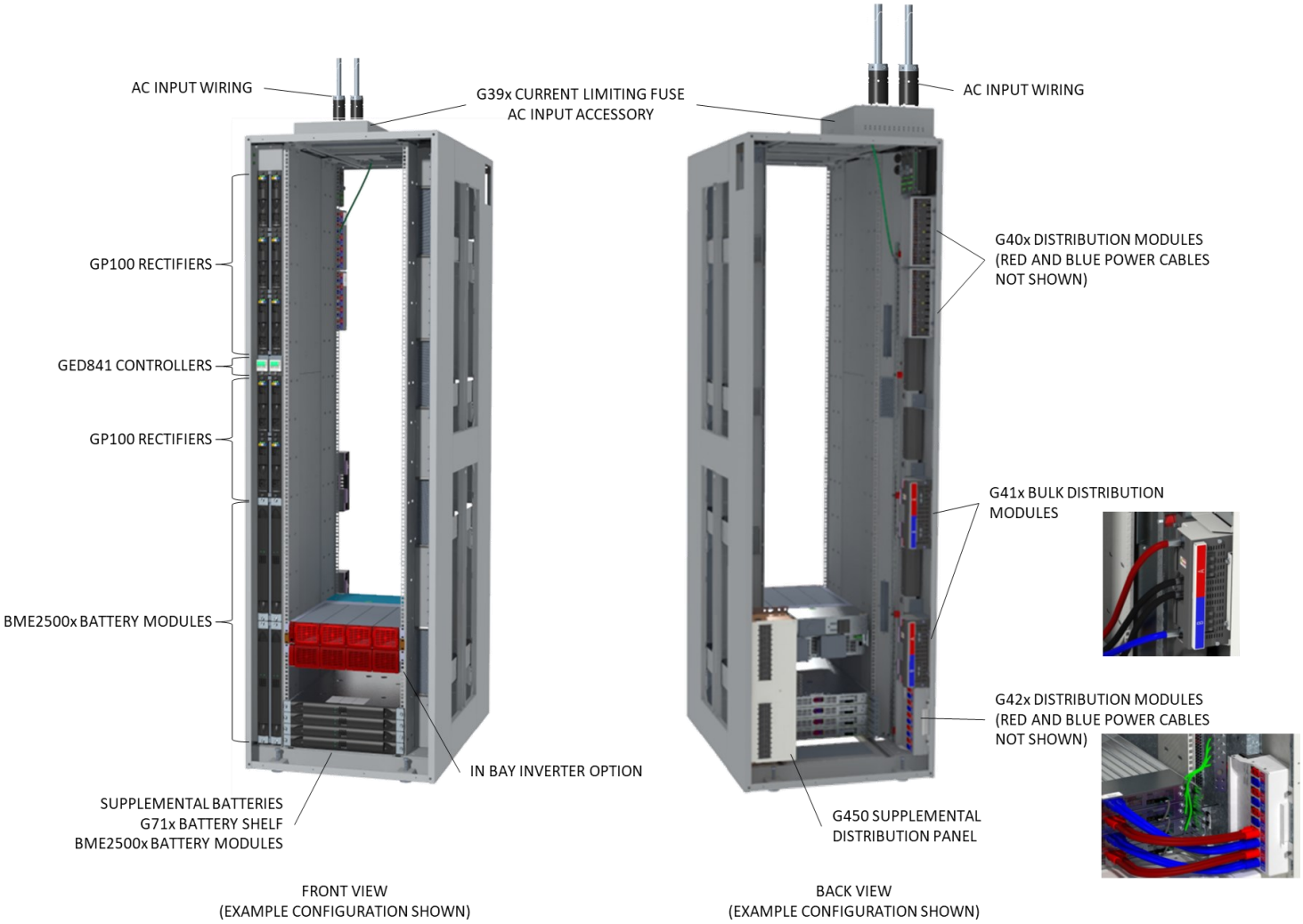

Figure 2 Edge System Components

2023 OmniOn power Inc. All rights reserved.

Edge Installation Manual

Unpacking the Edge and its Components

- The Edge is shipped on its own pallet separate from rectifiers and battery modules that ship on their respective pallets.
- Inspect the shipping pallets and containers for any damage prior to accepting receipt of the system.
- If any damages are noted, make photocopies of all shipping records before reporting this to the carrier.
- If any damage or missing items are noted after accepting delivery, notify the deliverer and request an inspection. Upon leaving our facility, OmniOn is not liable for any damage that occurs during shipping and handling.
- If a unit requires repair, please contact our customer support line, +1 972 244-9288, for information on repair and return information.

Parts Checklist

- When first opening your Edge Distributed Power Architecture System, confirm the contents of your shipment matches with the shippers packing list as some items will arrive as 'Ship Loose Items'.
- Retain the original packaging until the system has been installed and fully tested.
- Visually inspect the contents for any damage or missing items. If any damage is discovered, follow the same procedure noted when receiving the unit.
- Ship Loose parts: Toe Kick(8600232358P) Qty - 2, Screw Flat Head, #6-32(CC408577720) Qty - 8.

Operating/Storing the Units

- The unit should be stored in its original packaging.
- Store rectifiers in a dry area with the ambient temperature between -40°C and +85°C (-40°F and +185°F).
- Operate the rectifiers within an operating temperature range between 0°C and +40°C (32°F and 104°F).
- Operate cabinets, with the EDGECAB 390 or EDGECAB 391 fuse limiter options attached, to a maximum ambient of +35°C.
- Storage Requirements for battery modules is as follows:
  - VRLA: 1600283228A BME2500/120VRLA48 – store near room temperature 23-25°C in non-condensing environment.
  - Sodium Ion (NaION): 1600283229A BME2500/220NAION48 – preferred storage is between 20-30°C but may be stored between -20 and 50°C for up to a few days.
  - Nickel Metal Hydride (NiMH): 1600283230A BME2500/480NIMH48 – preferred storage is between 20-30°C but may be stored between -20 and 40°C for up to a few days.
- Off-Loading Enclosure from Shipping Pallet w/ Ramp Should be purchased separately (recommend 1-2 per site).

WARNING: Care should be taken when off-loading your Edge Distributed Power Architecture enclosure from its' secure packing assembly. Be sure to have two handlers and a safety spotter when removing the equipment to the mounting location. Do not populate any battery or rectifier positions before removing enclosure from pallet.

2023 OmniOn power Inc. All rights reserved.

1. Slide the ramp, 8600279070P to the side of the cushion plate.
2. Attach Ramp 8600279070P with (4) #10X2.5" Deck Screws. Ensure deck screws are flush with the mounting surface.

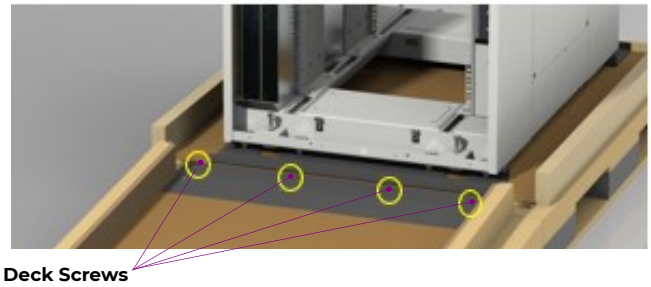

Figure 3 Ramp Deck Screws

Removing Enclosure to Pallet Anchor Bolts

Before lowering the leveling feet, remove 5/8 bolts from the bracket (8600273477P) and ten (10) 3/8" Hex Lag Screws from both front and rear sides of the enclosure. remove front and rear brackets.

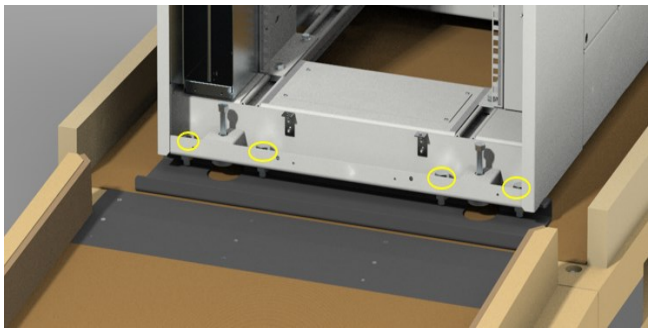

Figure 4 Pallet Anchor Bolts

Lowering Leveling Feet

Lower (4) adjustable leveling feet screws to lift enclosure off of front and rear brackets, 8600273477P.

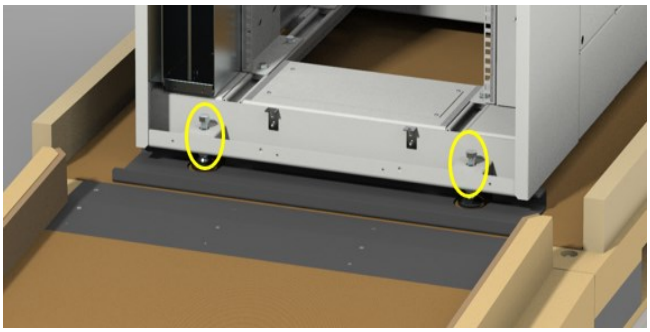

Figure 5 Lowering Leveling Feet

Raising the Leveling Feet

Once both brackets have been removed, raise the four (4) adjustable leveling feet screws to their maximum height. This will eliminate any clearance issues when rolling the enclosure off the cushioned pallet.

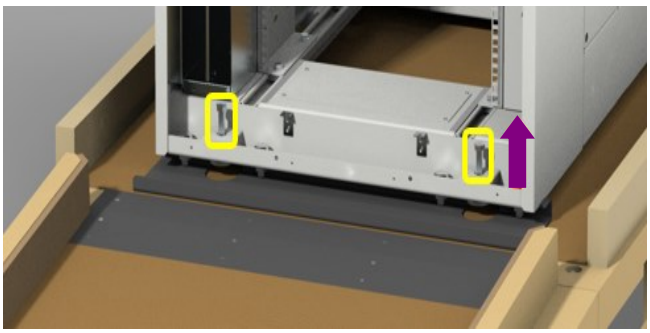

Figure 6 Raising Leveling Feet

Guide to Floor

Carefully guide the enclosure towards the ramp. It's recommended to have assistance on both sides and your spotter guiding and balancing the load from the front while moving slowly down the ramp. When on the floor, continue care in moving the enclosure to its' mounting area.

2023 OmniOn power Inc. All rights reserved.

Edge Installation Manual

Step 1 – Frame Mounting

Caution Asbestos Alert: Floor tiles manufactured between 1920 and 1960 may be made with asbestos. Removal of or drilling through asbestos-containing floor tile and/or mastic is a Class III operation under the OSHA asbestos standard for construction, 29 CFR 1926.1101. If you suspect your work area to contain asbestos tiles, refer to a qualified installation group for further information.

Mise en garde : Les carreaux de sol fabriqués entre 1920 et 1960 peuvent être fabriqués avec de l'amiante. L'enlèvement ou le perçage de carreaux de sol et/ou de mastic contenant de l'amiante est une opération de classe III selon la norme de construction 29 CFR 1926.1101 de l'OSHA sur l'amiante. Si vous soupçonnez que votre zone de travail contient des carreaux d'amiante, reportez-vous à un groupe d'installation qualifié pour plus d'informations.

1. Using dimensions shown, mark anchor centers on floor.
2. Drill hole size for anchors per manufacturer's specification.
    a) Vacuum and install anchors flush to floor.
3. Place enclosure into position.
4. Add shims (1600305805A) under each mounting location. See Figure 7 for shim kit. Do not remove the wheels (Castors) from the cabinet. Wheels shall remain attached to frame. Installing shims can ensure wheels do not contact floor.
5. Lower each of the four (4) leveling feet by turning the adjust 3/8"-16 bolt until the enclosure is flush against the shims installed above.
6. Place anchors and torque to manufacturer's specification.
7. The kick plate is part of the material that ships loose with the system. Find and install it with the four mounting screws as shown in figure 8. Once installed it will have to be removed to make feet and anchor bolt adjustments.

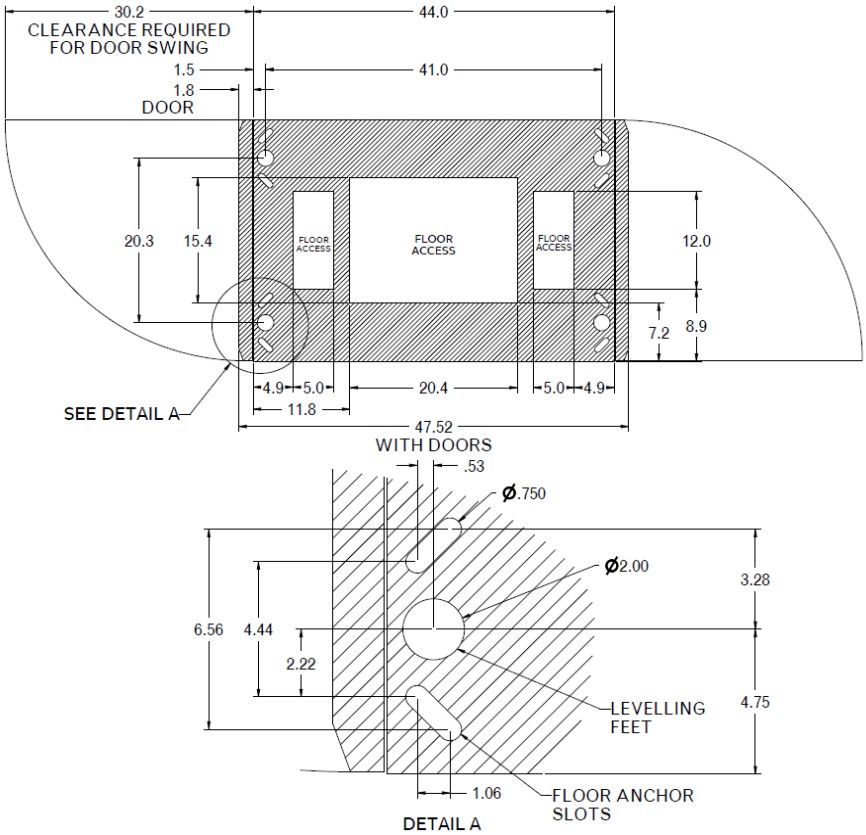

Figure 7 Mounting Dimensions

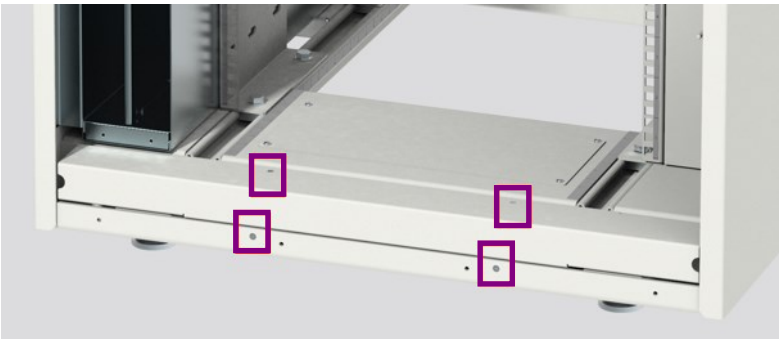

Figure 8 Kick Plate Screws

2023 OmniOn power Inc. All rights reserved.

Isolation Pads and Shim Kits

When your enclosure is anchored to the mounting surface and your site requires an electrical isolation barrier between the enclosure and mounting surface, Isolation pads and shim kits are available. When mounted and installed as shown in figures 9A and 9B, an electrical isolation barrier is created.

Figure 9A EDGE Isolation Plate Kit – 1600305789A

Figure 9B EDGE Cabinet Shim Kit – 1600305805A

NOTE: Where required, an isolation pad barrier must be place between the base of the enclosure and the floor. Anchor bolts are inserted through pre-cut holes to secure the enclosure to the floor mounting surface. Review the site requirements for your installation for information regarding isolation pads. (See Figure 9A and 9B regarding shim and isolation pad materials)

Step 2A – Frame Grounding (*)

- Connect a frame ground wire at one of two locations at the top of the enclosure.
- Recommended minimum wire size is 6 AWG.
- Recommended lug is two-hole, 1/4-20 bolt with a 0.625" hole spacing.
- Torque hardware to 65 in-lbs.

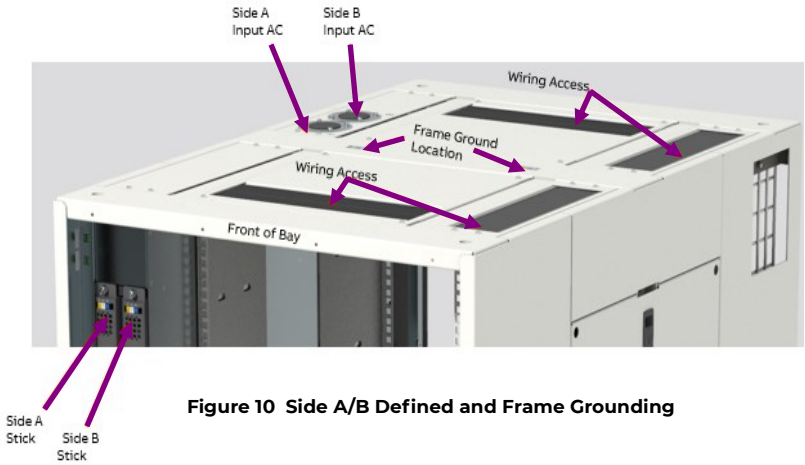

Figure 10 Side A/B Defined and Frame Grounding

2023 OmniOn power Inc. All rights reserved.

Step 2B – DC Bus Grounding (**)

- The enclosure is designed with the DC+ Connected to internal Ground Bar as shown in figure 11.
- The internal Ground Bar needs to be attached to the site MGB (Master Ground Bus).
- Using a digital multi-meter set to the ohms (resistance) scale, check for continuity between the enclosures' chassis ground connection and the internal ground bar.

(*) – Refer to your individual site's grounding requirements for the required ground connections to be deployed.

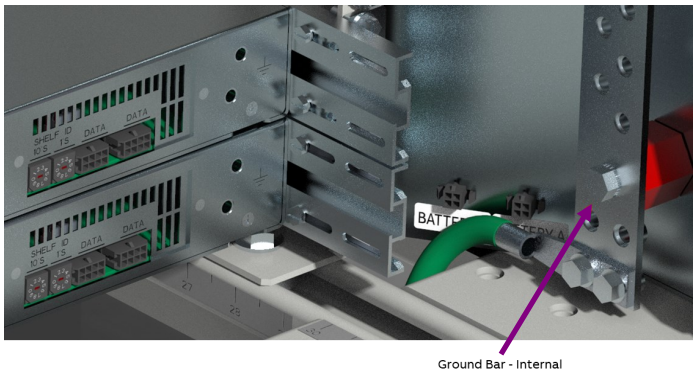

Figure 11 Internal ground bar

Attention: Confirm connection (Figure 11), Return (+48V) to Frame Ground by either connecting a minimum 6 AWG cable w/ 2-hole lug (1/4-20 hole, .625" spacing) or use the Rtn-to-Frame Gnd strap that ships loose with the enclosure.

Attention: Confirmez la connexion (Figure 11), retournez (+48V) à la masse du cadre en connectant un câble de 6 AWG minimum avec une cosse à 2 trous (1/4-20 trous, espacement de 0,625") ou utilisez la courroie Rtn-à -masse du cadre qui est livrée détachée avec le boîtier.

Step 3 – Connect AC Input

The rectifier modules in the left power stick (A Side) are fed by the front inlet and the rectifiers in the right power stick (B Side) are fed by the back inlet when viewed from the front Top of the enclosure. Note each rectifier modules' address. 2, 3, 4 and 5 rectifier stick configurations are available. Rectifier sticks also have different number of vertically slotted battery modules. For all configurations the lowest rectifier is address G010101 for side A and G010201 for side B and the addresses count up from there as show in the 3/3 example shown in figure 12.

Danger: Ensure AC power is OFF and use lock-out tagout procedures before connecting AC wiring. Follow all national wiring rules when connecting to AC mains. Turn off external disconnect or unplug AC service prior servicing.

Ensure that the disconnects/socket outlets (branch protection or Pluggable Type B disconnections) to the cabinet are easily accessible. End user must provide external UL-listed surge protection to the cabinet to reduce transient potential to less than 2500 volts.

Caution: Route AC cords to avoid contact with sharp or rough surfaces that may damage insulation and cause a short circuit.

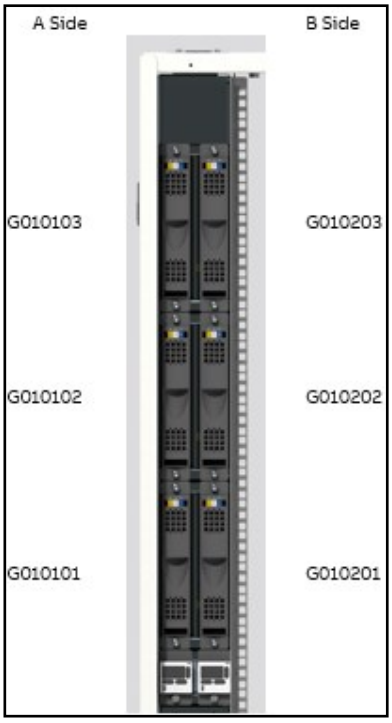

Figure 12 Rectifier stick configura-

2023 OmniOn power Inc. All rights reserved.

NOTE: Size AC field-wired conductors with 75°C ampacity (NEC) equal to or greater than their panel board circuit breaker rating.

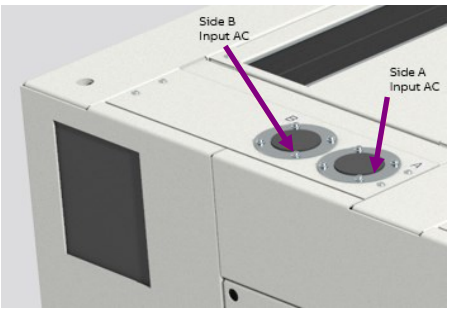

Figure 13 AC input connection

Step 3A – 480V_{AC} Pluggable Input connection

- Input AC provided through two (2) 50A_{AC} California Style Twist-Lock Inlets at the top of the enclosure.
- Two 4 conductor, 6 AWG, 10' long cords provided. Opposite end terminated with CS8165C connecter.
- Mating Part number for the Twist-Lock Inlets, CS8164C.

Enclosure Connector: CS8175

	No. of rectifiers	Current rating
480V_{AC} Feed	3	30A_{AC}
	4	40A_{AC}
	5	50A_{AC}

Table 1 Branch protection ratings

N+1 numbering/addressing is the same as A/B – controller knows that all rectifiers are on the same bus and the rectifier location by the address #.

CABLE PART NUMBER	WIRE #1		WIRE #2		WIRE #3		WIRE #4		WIRE #5	
	LINE #1		LINE #2		LINE #3		LINE #4		LINE #5	
	CONNECTOR POSITION	WIRE COLOR	CONNECTOR POSITION	WIRE COLOR	CONNECTOR POSITION	WIRE COLOR	CONNECTOR POSITION	WIRE COLOR	CONNECTOR POSITION	WIRE COLOR
8600301807P	X	BLACK	Y	RED	Z	ORANGE	GND	GREEN	No Connect	WHITE

Table 2 AC Wiring Chart

5 wire cable is used so wire colors are aligned with expected color codes - white is not connected as no neutral is used in this system.

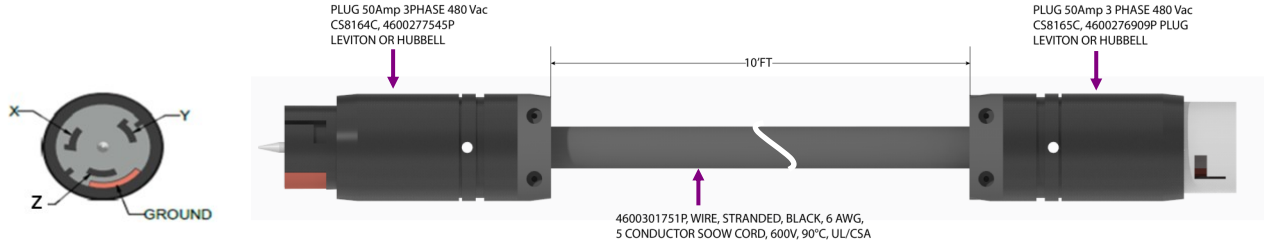

Manufacturers # CS8164C

Figure 14 Connecter

2023 OmniOn power Inc. All rights reserved.

Step 3B – 200/208/240/480V_{AC} Field-wiring Input connection

Input AC is provided through four (4) inlets on the top of the enclosure.

Branch protection should be noted as 50A.

Recommended conduit size 3/4" or 1", Remove top plate and punch holes for proper conduit size.

Use 6AWG ferrules on the end of wires (L1, L2 and L3) and 6AWG single hole lug (1/4" bolt) on ground wire.

- Route 6 AWG wires (L1, L2, L3 and ground) through each conduit.
- To connect the wires to the terminal block, Strip the wire and crimp the ferrules. Insert the wires in clamping area and tighten the screws. Torque terminal block connection to 16 in-lbs. max.
- Attach the lug to ground wire and connect the lug to grounding position as shown in the figure 16. Torque terminal block connection to 65 in-lbs.

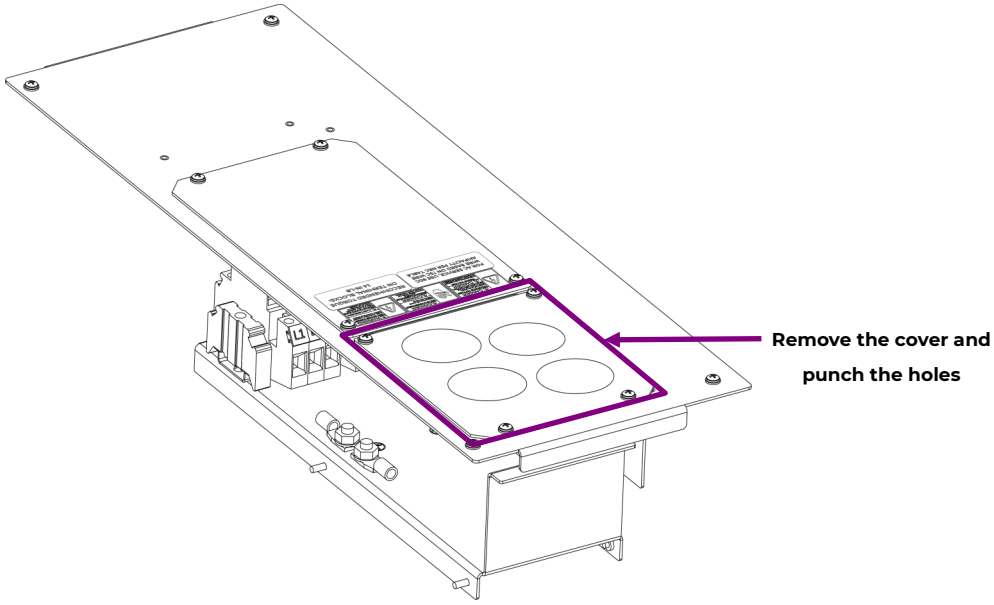

Figure 15 Punch conduit holes in cover

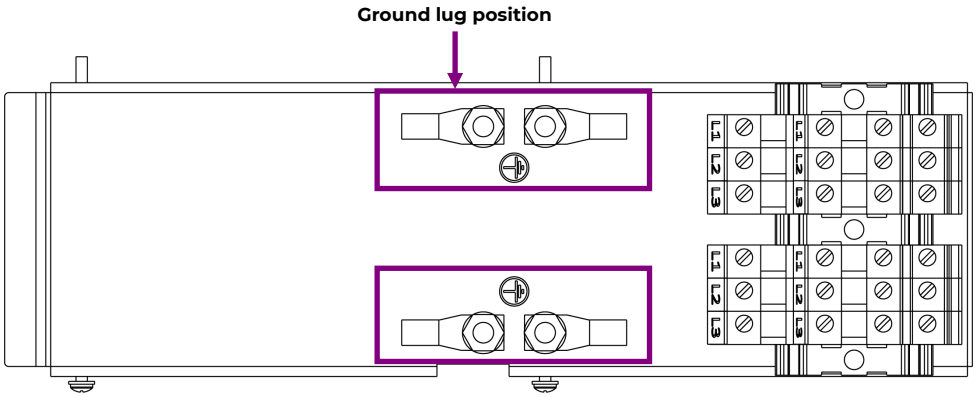

Figure 16 Ground wire connections

2023 OmniOn power Inc. All rights reserved.

Step 4 – Unpacking Battery Modules

Caution: Modules are heavy**.** Handle with care.

Caution: Batteries are a potential source of HIGH ENERGY. Use caution to prevent electric shock and burns.

Carefully cut or remove the packing tape that's securing the top cover. Open the box top cover flaps and remove any packing material. If the battery is wrapped or secured in a poly bag, removed and set aside.

NOTE: It's not necessary to remove the battery fully from the package prior to performing this battery voltage test.

The VRLA battery includes a means to pre-test the battery voltage before it's installed in the enclosure. Using a multi-meter set for DC voltage, insure the meter is an auto-ranging style or the device is set with on a range with a maximum voltage of 100V_{DC}. Insert the Red (+) positive and Black (-) negative leads into the corresponding test openings found on the top cover of the battery.

If your reading is below 42.0V_{DC}, contact technical support and follow the instruction to return the battery in its original container, including all packing materials and seal the box.

NiMH and Naion battery modules do not have readily accessible battery test jacks. No voltage measurements are required.

Weight and measures of batteries

Battery Type	Weight of battery	Weight of battery in box	Battery box dimensions
NiMH (1600283230A)	47.5 lbs	53.5 lbs	L=35", W=23.5", H=7"
NaION (1600283229A)	38.5 lbs	46.5 lbs	L=31", W=26", H=6.5"
VRLA (1600283228A)	44 lbs	51.25lbs	L=31.25", W=24.5", H=5.75"

Table 3 Weight and measures of batteries

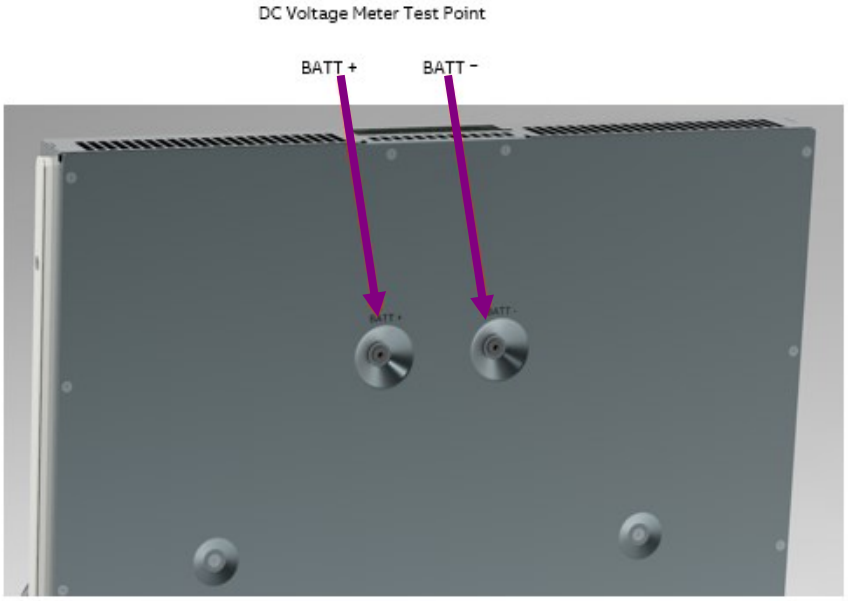

Figure 17 VRLA Battery Module Test Points

2023 OmniOn power Inc. All rights reserved.

Step 5A – Install Battery Modules

Battery Modules only install in Battery Module positions.

Caution: Modules are heavy. Handle with care.

If necessary, use two persons.

Vertical Oriented Battery Modules
Batteries may be installed into or removed from a non - operating or operating system using the following instructions below as required. Addresses are used to display, manage, and report rectifier and battery information including location.

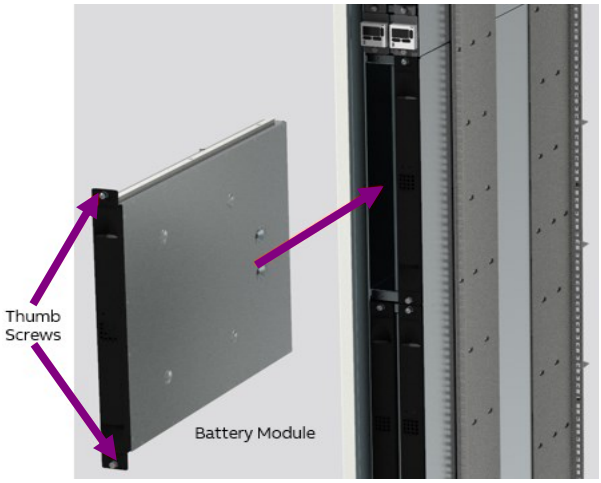

Figure 18 A / B Battery Module Installation

1. Starting with the lowest open slots, slide Modules firmly into A-side and B-side Battery Module positions.
2. Secure with thumb screw using #2 Phillips screwdriver. Hand tight.
3. Note each battery module address. 1, 2, and 3, battery stick configurations are available. For all configurations the lowest battery address is BM0101 for side A and BM0201 for side B and the addresses count up from there as show in the 3/3 example at right.

Use battery slot filler part number, 8602092240P, to cover any unused positions.

Horizontal Oriented Battery Installation – If Option Utilized

NOTE: Maximum load rating for the EDGECAB G7xx battery trays is 47.5 lbs (21.6 kg).

Caution: Route DC battery cable(s) to avoid contact with sharp or rough surfaces that may damage insulation and cause a short circuit.

1. Horizontal shelves installed at the factory will have the ID address of the shelf configured. Adding a shelf in the field will require setting a unique ID for the shelf. (See instructions for setting the ID in the next section.)
2. Starting with the lowest open slots, slide Modules firmly into A-side and B-side Battery Module positions.
3. Secure with thumb screw using #2 Phillips screwdriver. Hand tight.
4. Note each battery module's address.

Figure 19 1U Horizontal Battery Shelf Assembly

Figure 20 24 Position Battery Tray Asm.

Lowest shelf address starting at bottom position

2023 OmniOn power Inc. All rights reserved.

Step 5B – Field Installation Instructions for Horizontal Oriented Battery Shelves

NOTE: Maximum load rating for the EDGECAB G7xx battery trays is 47.5 lbs (21.6 kg).

Your Edge has the ability to increase plant hold up time by field installation of additional battery power by field installing additional horizontal battery trays. That may have been shipped with the unit. Following the instructions below for adding up to 22 auxiliary battery shelves to your system.

1. Loosen and remove the rear shelf rack extension glides before installing shelf into position.
2. Insert the battery shelf assembly into the lowest open position with the rack. Begin with Bottom shelf ID 11, Red connector, connects to A side; then shelf ID 12, Blue connector, connects to B side; continue to alternate with Red, A side and Blue, B side shelves.
3. Install the four (4) front rack mounting screws that were provided within the installation kit. (Figure 21)
4. At the rear of the enclosure, locate the two shelf rack extension glides (Figure 22). Insert both right and left glides into the shelf openings and align each with the rear rack frame.
5. Install the four (4) rear rack mounting screws that were provided with the installation kit.
6. Ground shelves to main ground bar. 8600302258P 10 AWG wire provided with each shelf to ground each individual shelf to the Ground bar or 8600285950P 4 AWG cable for grounding multiple shelves together with the interconnect brackets (shipped with each horizontal battery shelf) as shown in Figure 25.
7. Battery shelves may be connected into the Edge system using battery connection PDU 1600274227A (shown in figure 23).
8. Connect battery shelf to distribution with Red Cable 8600262740P or Blue Cable 8600262741P as shown in Figure 24. **Note: In A/B systems, bottom shelf must be red connected to the A-side.**
9. The solid color cable is the (-) polarity and the colored cables with black tracer is (+) .
10. Install the shelf to shelf communications cable and shelf to Edge communications cable, both provided with the system, as shown in Figure 25.

Figure 21 Front Rack Mounting Screws

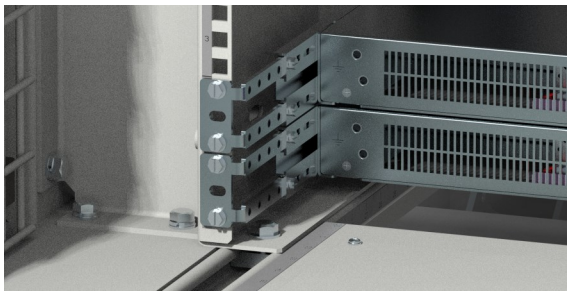

Figure 22 Rack Extension Glides

Figure 23 Battery PDU

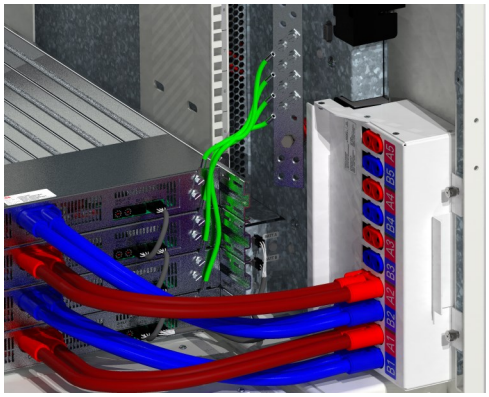

Figure 24 A / B Cable lead dress

2023 OmniOn power Inc. All rights reserved.

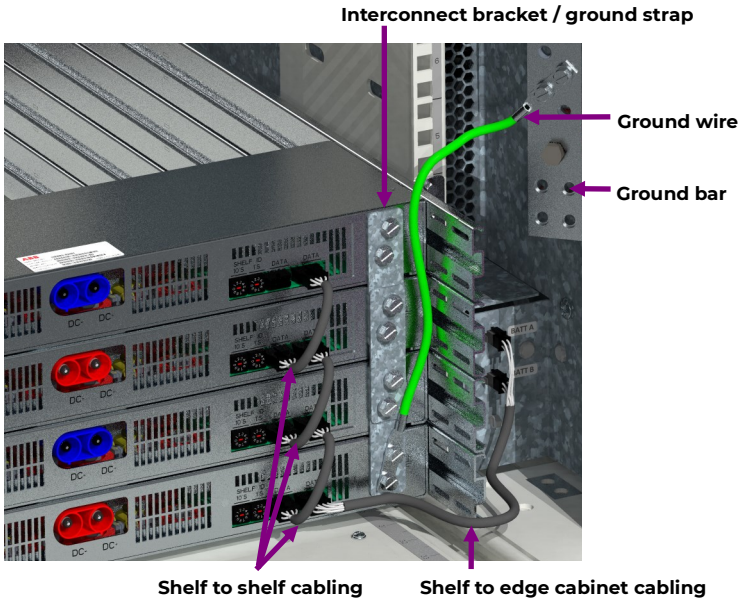

Figure 25 shelf to shelf, shelf to edge cabling for communications and battery shelves connection to ground bar

Edge Battery Shelf ID Numbering

The Edge battery shelves supply data to the controller on the health of each battery string. This information is continuously sent to the controller by the DATA port connection on each shelf and wires directly back to the plant controller. The Shelf ID allows the controller to identify the correct battery string data to the correct reporting string. Horizontal battery shelves start at ID #11. The shelves ID count begins with the lowest (Bottom) position shelf as "Shelf #11". For reference, Shelf ID #11 shows the 10's switch in position 1 and the 1's switch in position 1. Shelf #32 is the largest battery shelf capacity for the plant. Shelf ID #32 shows the 10's switch in position 3 and the 1's switch in position 2. Shelves with odd addresses are assigned to the A plant. Shelves with even addresses are assigned to the B plant.

Figure 26 Shelf ID Numbering Switches

Battery Shelf ID Numbering

Shelf #	10'S	1'S	Shelf #	10'S	1'S	Shelf #	10'S	1'S
32	3	2	25	2	5	18	1	8
31	3	1	24	2	4	17	1	7
30	3	0	23	2	3	16	1	6
29	2	9	22	2	2	15	1	5
28	2	8	21	2	1	14	1	4
27	2	7	20	2	0	13	1	3
26	2	6	19	1	9	12	1	2
						11	1	1

Table 4 Battery Shelf ID Switch Positions

2023 OmniOn power Inc. All rights reserved.

Edge Battery Module LED Status

The following table provides the general LED states for all the battery modules designed to be installed in the Edge Cabinet. This includes the HDR VRLA, sodium-ion, and NiMh 48V batteries.

		LED States	
	Battery Condition	**ALM**	**DC**
1	OK	Green	Green
2	Not communicating to system controller (GP Communication Fail)	Red (Blink)	Green
3	Emergency Power Off (EPO) Activated	Amber	Amber
4	Output Fuse Open	Red	Red
5	Internal Disconnect (LVD) Open	Red	Amber
6	Internal Disconnect (LVD) Fail	Red	Red
7	Very High Battery Temperature	Red	Amber
8	OK Battery is receiving current and being charged. (State of Charge)	Green	Green (Blink)
9	OK Battery is supplying current and being discharged. (State of Discharge)	Green	Amber (Blink)

Table 5 LED Status for battery modules

Edge Battery Module Operating Voltages

The Edge Battery modules are available in three different battery technologies. These include the BME2500/120VRLA48 (predecessor BME80BATT48AZ) Valve Regulated Lead Acid, BME2500/220NAION48 sodium-ion, and BME2500/480NIMH48 nickel metal-hydride battery modules. Adjust all alarm and feature thresholds appropriately for the battery and float voltage being utilized. Consult technical field support for assistance as required. Each of these modules has a prescribed operating range defined in the table below.

Battery Module	Nominal Float Voltage	Voltage Range
BME2500/120VRLA48 BME80BATT48AZ	54.50V	38.00V to 55.20V
BME2500/220NAION48	58.00V	38.00V to 58.00V
BME2500/480NIMH48	55.00V	38.00V to 56.00V

Table 6 Battery Module Operating Voltages

2023 OmniOn power Inc. All rights reserved.

Step 6 – Set Jumper - LAN Port per Galaxy Pulsar Edge Controller

Each Edge power stick includes a slot for one Galaxy Pulsar Edge Controller. Before installing the controllers, configure output alarm contact type and/or LAN Port operating mode by using the jumpers on the side of the controller. See figure in next page for jumper locations.

<table>
<tr><th colspan="3">Controller Jumper Settings</th></tr>
<tr><td rowspan="2">LAN Port</td><td colspan="2">Configure and view system parameters using web browser. Default IP address is 192.168.2.1 In server mode.
CAUTION: Do not connect LAN port to a network when jumper is set to Local.</td></tr>
<tr><td>Local (Server): LAN connects to a laptop.
Local (Server) is a temporary setting. Once configuration is complete move the jumper back to Network (Client) mode.</td><td>Network (Client) LAN connects to a network. (Default).</td></tr>
<tr><td rowspan="7">Alarm Relays</td><td colspan="2">Alarm Relays can be set to operate as Close on Alarm or Open on Alarm. Open on Alarm is the Factory Default setting.
Move Alarm jumpers to Close on Alarm when required.
The number of alarm relays in this controller is 6 alarm relays - PMJ, PMN, 1, 2, 3, and 4.
Relays 1 - 4 are assigned specific functions as described in equipment documentation.</td></tr>
<tr><td colspan="2">Relay defaults</td></tr>
<tr><td>Relay 6</td><td>Power Major Alarm (PMJ)</td></tr>
<tr><td>Relay 5</td><td>Power Minor Alarm (PMN)</td></tr>
<tr><td>Relay 4</td><td>Fuse Alarm Major (External FAJ)</td></tr>
<tr><td>Relay 3</td><td>AC Fail (ACF)</td></tr>
<tr><td>Relay 2</td><td>Rectifier Fail alarm (RFA)</td></tr>
<tr><td>Relay 1</td><td>Battery on Discharge alarm (BD)</td></tr>
</table>

Table 7 Controller Jumper Settings

NOTE: Additional Galaxy Pulsar Edge Controller information is available in the controllers' quick start guide, 850035894.

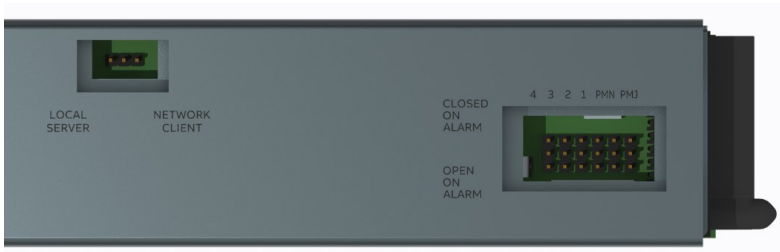

Figure 27 Controller Settings

Alarm Relay Jumper Examples	
Controller Type	Factory Settings
0I6R (6 Relays)	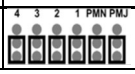 Close on Alarm Open on Alarm

Step 7 – Install Controllers per Galaxy Pulsar Edge Controller Quick Start Guide

The Edge Distributed Power Architecture Enclosure has its' controller's factory pre-installed and tested. If it's necessary to install a controller, follow the next steps.

- Install an A side (left slot) and B side (right slot) controller into the open controller slots between the rectifiers and the battery modules in each Edge stick. The controller is hot swappable and can be removed/installed with the system running.
- Secure controller using thumbscrew. Hand tight.
- Install all unused controller positions with a controller slot filler, 8600242701P.

Figure 28 A/B Side Controller Installation

2023 OmniOn power Inc. All rights reserved.

Step 8 – Controller I/O Access

Connectors are on right side rear near the enclosure ceiling.

See figure 29 for inset view

1. Connect LAN to Ethernet network. (10/100 Base-T).
2. Connect P15 or P16: RS485 to serial comm. connection P15 or P16 connector of next enclosure, when applicable. (Note: Generally, not used).
3. If desired, connect TB10-TB15: Alarm outputs to alarm relay monitoring equipment. TB10-TB15 position information shown in table below.
4. If desired, TB26: Remote Interlock (RECT INTLCK) may be used to place rectifiers in a hardware controlled Standby-by mode (rectifier outputs are shut and held off with AC input applied independent of the system controller). Can be used in conjunction with EPO. To use remote interlock, the factory installed jumper must be removed and replaced with field wiring to whatever device will control the interlock function. Interlock shorted = rectifiers on. Interlock open = rectifiers in standby.
5. If desired, TB25: Emergency Power Off (EPO) may be used to open output devices on the batteries. To use EPO, the factory installed jumper must be removed and replaced with field wiring to the device that will control EPO. EPO shorted = batteries on the bus. EPO open = batteries removed from DC output bus.

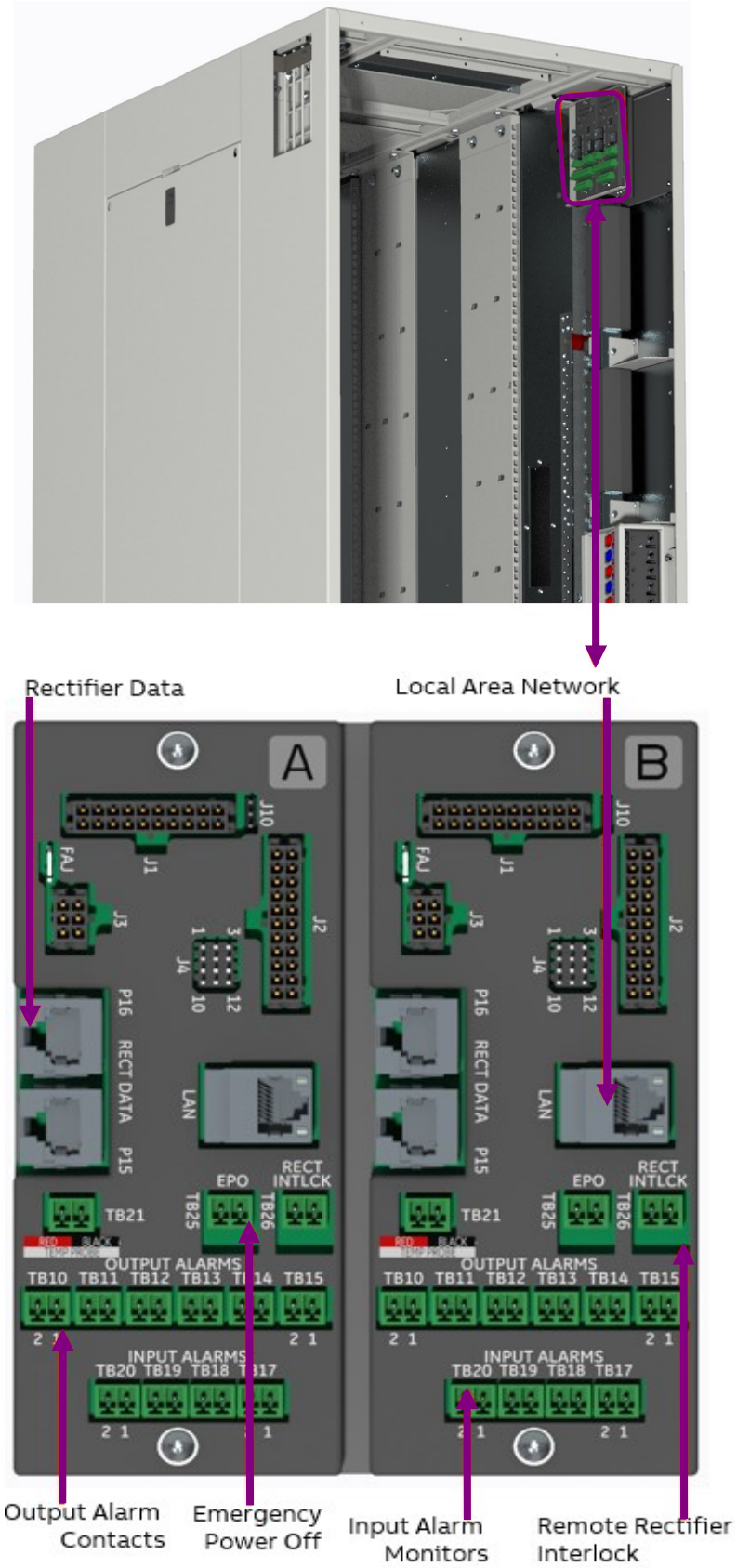

Figure 29 I / O Interface Board

2023 OmniOn power Inc. All rights reserved.

Edge Installation Manual

Step 8 – Controller I/O Access (continued)

OUTPUT ALARMS (RATED 60V_{DC} @ 0.5A; DEFAULT AS "OPEN ON ALARM")			INPUTS ("HOT" DC BUS VOLTAGE CONTACT MONITORS)		
REF	FACTORY DEFAULT ASSIGNMENT (SIGNAL – PIN 1; RETURN – PIN 2)	FIELD ASSIGNMENT/ NOTES (USER CONFIGURABLE)	REF	FACTORY DEFAULT ASSIGNMENT (SIGNAL – PIN 1; RETURN – PIN 2)	FIELD ASSIGNMENT/ NOTES (USER CONFIGURABLE)
TB10	R4 (Fuse Alarm Major)		TB17	AMJ (AUXILIARY MAJOR)	
TB11	R3 (AC Fail)		TB18	AUX1 (COOLING SYSTEM FAIL)	
TB12	R2 (Rectifier Fail)		TB19	AUX2 (DOOR OPEN)	
TB13	R1 (Battery on discharge)		TB20	AUX (SMOKE DETECTED)	
TB14	PMN – POWER MINOR		INPUTS (NORMALLY CLOSED "DRY", NO VOLTAGE, BINARY CONTACT MONITORS)		
TB15	PMJ – POWER MAJOR		TB25	EMERGENCY POWER OFF (REMOTE BATTERY OPEN)	
			TB26	RECTIFIER INTERLOCK (REMOTE RECTIFIER OFF)	
DIGITAL PORTS					
REF	DESCRIPTION		REF	DESCRIPTION	
TB21	OPTIONAL 1-WIRE TEMPERAURE PROBE FOR ENCLOSURE INLET AND REAR EXHAUST (1-WIRE SIGNAL ON PIN 1; RETURN ON PIN 2)		P15/P16 RECT DATA	RS485 / GALAXY PROTOCOL RECTIFIER SEREIAL BUS	
LAN	10/100 BASE-T ETHERNET				

Table 8 Input / Output Alarms / Digital Ports

The previous table provides the locations to access the key alarms available from the Pulsar Edge in the Edge Cabinet application. The Pulsar Edge controller provides a plethora of alarms. Many of the alarms are standard alarms that are described in the Pulsar Edge controller product manual. The primary alarm addition to the controller are those associated with the battery modules. These alarms as well as the standard alarms are generally configured to customer standards and tested as part of the cabinet commissioning process. When there are any questions on alarming or basic controller operation please contact our 24/7 technical support.

NOTE: Factory Defaults can be re-configured.

Step 9 – Install Rectifiers

Rectifiers only install in rectifier positions.

1. Starting with the lowest open position, slide each rectifier module firmly into a rectifier position – oriented as shown.
2. Tighten thumb screws using #2 Phillips screwdriver. Hand tight.
3. Install rectifier slot filler, 8600234137P, for all unused positions.

Figure 30 Rectifier Module Installation

2023 OmniOn power Inc. All rights reserved.

Step 10 – Install Edge "G4xx" Series Plug-In PDU's (Power Distribution Units)

Up to eight (8) Edge "G4xx" Series DC PDU's can be plugged into the DC bus on the rear of the enclosure. The modular Edge Cab "G4xx" panel supports various configurations of DC bullet style circuit breakers and carries up to (400A_{DC} Maximum Total). A table of the breaker size and quantity for each "G4xx" series PDU is shown below.

(See Spares for available circuit breakers near end of this guide).

1. Verify no breakers are plugged into the panel to be installed or that they are OFF.
2. Remove the covers over the PDU receptacle in enclosure. (See figure 31)
3. Align sockets on the DC PDU with the PINS on the system DC bus. (See figure 31) and plug each PDU onto the output BUS.
4. Firmly plug each DC breaker panel onto bus.
5. Secure all PDU panels using the two (2) thumb screws.

Ordering code	"G4xx"	Breaker Sizes	Breaker Max. Qty
1600213820A	G401	30 - 100A_{DC}	10
1600250698A	G411	125 - 250A_{DC}	2

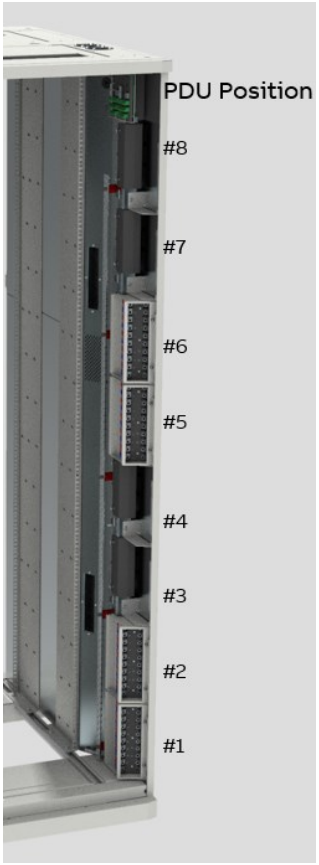

Figure 31 PDU Locations

2023 OmniOn power Inc. All rights reserved.

Step 11 – FAJ Alarm wiring

- Connect the FAJ alarm wiring from PDU to edge cabinet.
- This applies to all PDU's of "G4xx" series.

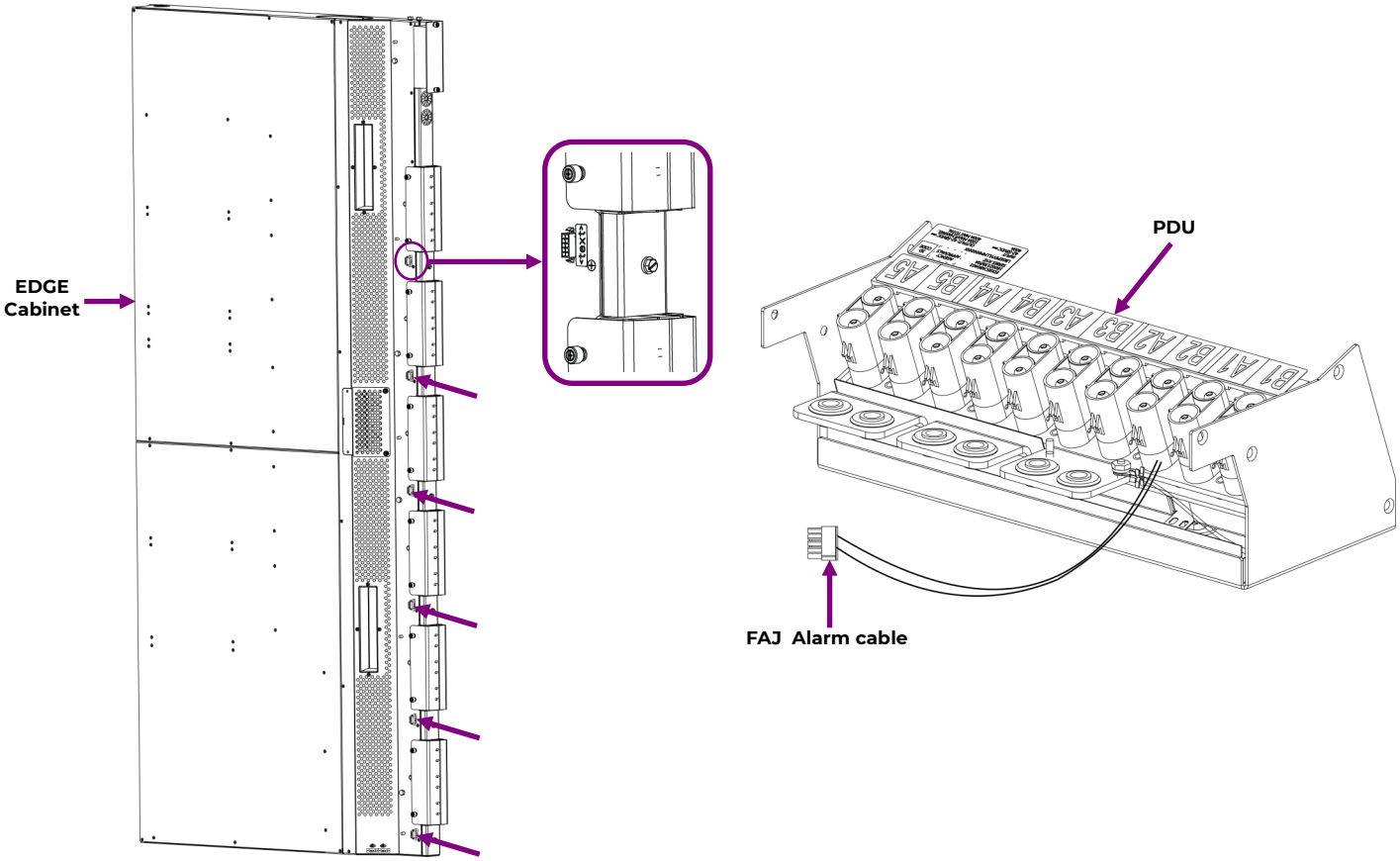

Figure 32 FAJ Alarm connections

Step 12 – G401 PDU Load Breaker and Cable Sizing

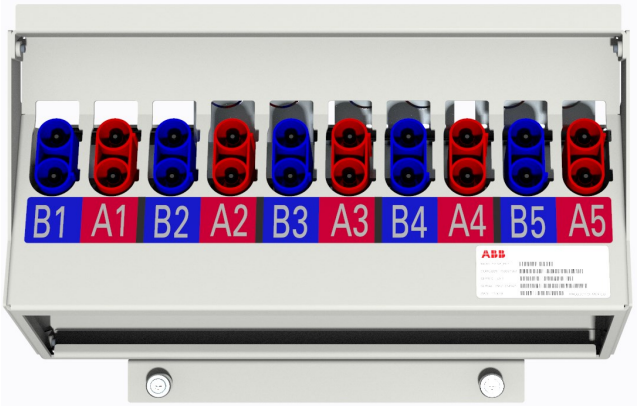

Figure 33 PDU G401

2023 OmniOn power Inc. All rights reserved.

Step 12 – G401 PDU Load Breaker and Cable Sizing (Continued)

Figure 34 below shows PDU Installation

Figure 34 PDU Installation

Recommended minimum wire size for wiring running internal to a single Edge

Circuit Breaker	Min Wire Gage	Molex Connector w/ Pins for custom cables with blunt cut ends. (see table 8 for cables)
0 – 30A	10 AWG	Red - 1600264826A Blue - 1600264825A
35 – 55A	8 AWG	Red - 1600272824A Blue - 1600272823A
60 – 80A	6 AWG	Red - 1600264828A Blue - 1600264827A
90A – 100A	4 AWG	Red - 1600272826A Blue - 1600272825A
110 – 115A	2AWG	Red - 1600272830A Blue - 1600272829A

Table 9 PDU Internal Wiring Recommendation & Field Assembled load cable connectors with Pins

Use 90°C rated wire minimum

1. Install Molex connector to corresponding load breaker position. Connections are keyed.

   RED – A Side Loading BLUE – B Side Loading
2. Dress wires to server/router equipment and connect to equipment. Observe proper polarity.
3. Verify breaker is OFF and install into panel.
4. Orient breaker with guard toward the output connectors.
5. Fully seat breaker by pressing firmly.

Warning:

- Do not install breakers with ratings above 100A for G401.
- Do not load breakers to greater than 80% of rating.
- Keep the total load under 400Adc per PDU.
- Additional DC PDU's can be field installed. (If shipped with cabinet)
- Edge G401 Ordering information: 1600213820A Plug in 400A Power Distribution Module (PDU).

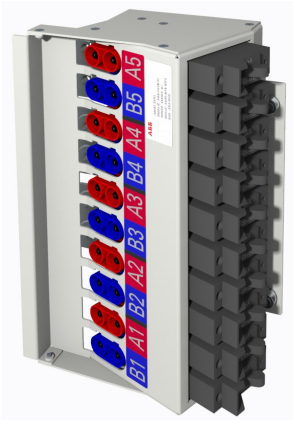

Figure 35 PDU with Breakers

2023 OmniOn power Inc. All rights reserved.

Step 12 – G401 PDU Load Breaker and Cable Sizing (Continued)

A full height green wire ground bar is provided for connection customer supplied equipment. Mounting hardware is not provided. Use two-hole lugs on 5/8" centers. Recommended wire size is 6 AWG.

NOTE: Ground Bar must be terminated to Ground external connection.

NOTE:

- Field-wired Conductors - Follow all National Electric Code (NEC) and local rules and regulations.
- (72") factory pre-terminated cables from 10AWG to 2 AWG with blunt cut ends are available as an option. See table below.
- Insulation rating: 90°C minimum; 105°C (minimum) if internal to enclosed equipment enclosures.
- Size DC field-wired conductors with 75°C Temperature rating (NEC) equal to or greater than circuit breaker/fuse rating.

PDU Wire set Color Scheme

	A Feed – Red connector	B Feed – Blue connector
-48V Wire	Red	Blue
Return	Red with black tracer	Blue with black tracer
Factory Pre-Terminated PDU Wire sets – 72" Long, PDU connector on one end, blunt cut on other SEE TABLE 8 FOR ORDERING END TERMINATIONS FOR BLUNT CUT ENDS		
	A Feed (red and red w/ bk tracer)	**B Feed (blue and blue w/ bk tracer)**
10 AWG	1600261217A	1600261218A
8 AWG	1600272817A	1600272818A
6 AWG	1600261219A	1600261220A
4 AWG	1600272819A	1600272820A
2 AWG	1600272821A	1600272822A

Table 10 Pre-terminated Factory Cables

Step 13 – G411 Connect DC Power to End Users' Equipment

DC Cables: 72" Blunt cut (Ordering info. See PDU wire set table)

AWG #	Maximum Breaker Rating
2	$125A_{DC}$
1	$150A_{DC}$
2/0	$175A_{DC}$
4/0	$250A_{DC}$
@ 90°C temperature rating minimum	

2023 OmniOn power Inc. All rights reserved.

Step 13 – G411 Connect DC Power to End Users' Equipment (Continued)

G411 accepts up to a 250A circuit breaker loaded to 80% of rating.

1. Connect DC cables to equipment. Observe proper polarity.
2. Install 2-hole lug for 3/8" studs on 1" centers to corresponding load breaker position. Torque hardware to 240 in-lbs.
3. To allow the breaker alarm connections to seat properly, first remove the sleeve collars from each post on both sides of the bullet breaker. See Note and Figure 36B.
4. Verify breaker is OFF and install into panel. Orient breaker with ON position and guard toward the output connectors. Fully seat breaker by pressing firmly.
5. A full height green wire ground bar is provided for connecting customer supplied equipment. Mounting hardware is not provided. Use two-hole lugs on 5/8" centers. Recommended wire size is 6 AWG.
6. Ground Bar must be terminated to Ground external connection.

NOTE: Remove all breaker collars from each post terminal by grasping with pliers and gently removing collar over the end of each bullet terminal.

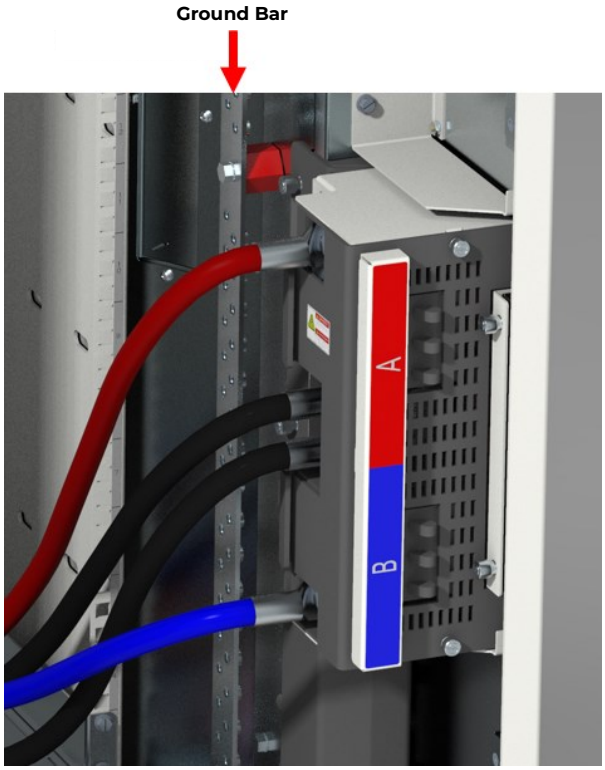

Figure 36A G411 View

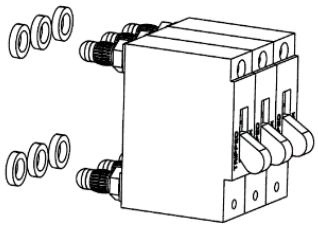

Figure 36B Breaker

Warning:

- Do not install breakers with ratings above 250A.
- Do not load breakers to greater than 80% of rating.
- Keep the total load under $400A_{DC}$ per PDU.
- Additional DC PDU's can be field installed. (If shipped with cabinet)

Alert:

- N'installez pas de disjoncteurs dont les cotes sont supé-rieures à 250A.
- Ne chargez pas les disjoncteurs à plus de 80 % de la cote.
- Maintenir la charge totale en dessous de $400A_{DC}$ par PDU.
- Des DDU suplementaries peuvent etre installes sur le terrain. (Si expédié avec l'armoire)

Edge G411 ordering information: 1600250698A Plug in 400A Power Distribution Module (PDU).

2023 OmniOn power Inc. All rights reserved.

Step 13 – G411 Connect DC Power to End Users' Equipment (Continued)

NOTE: Size DC field-wired conductors with 75°C temperature rating (NEC) equal to or greater than circuit breaker/ fuse rating.

NOTE: Field-wired conductors - Follow all National Electric Code (NEC) and local rules and regulations.

NOTE: To determine if the breaker collars need to be removed from your assembly, locate the ID label located on the PDU assembly. If the Series number shown on the your label is 1:2 or larger, the collars do not have to be removed.

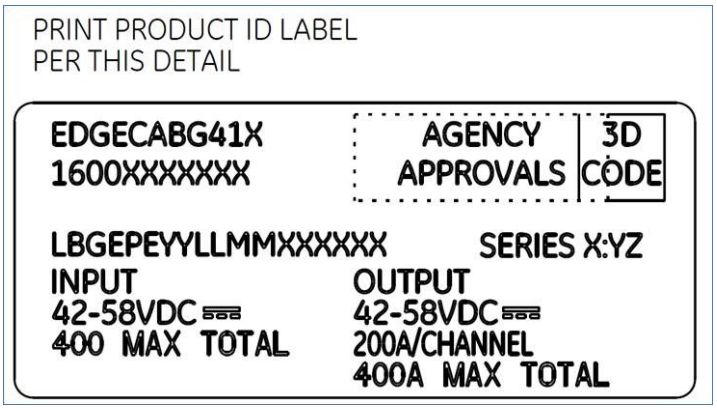

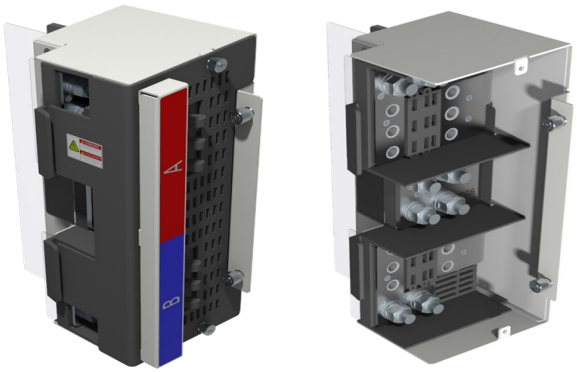

Figure 37 View of PDU – G411

2023 OmniOn power Inc. All rights reserved.

Step 14 – User Equipment Adjustable Rack Space

The Edge System enclosure has 52rack units of front and rear rails dedicated to customer equipment available for use. These rails are field adjustable to accommodate different mounting considerations (front, middle and center mount equipment). To adjust, loosen the two top and bottom rack rail mounting bolts for each rail. Slide each rail (left and right) to the desired location. Tighten the two upper bolts first when adjustments are completed and torque all to 65 in-lbs.

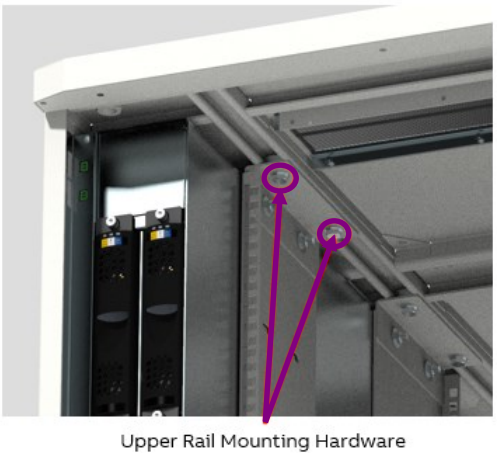

Figure 38 Adjustable Rack Rails

Step 15 – Customer Cable Access

The Edge includes horizontal customer wiring trays located at the lower, middle and upper sections of the right side of the Edge. Air dams are provided at the front of each wiring tray to block airflow into this area. Removing the locking side panels provides convenient cable access to these pathways. additional air dams for cable routing are provided on the top of the Edge. They provide a vertical wiring channel to access the enclosure for customer alarm and signal routing. See Step 2 for all locations of these vertical access points.

Figure 39 Wiring Trays for Cable Access

2023 OmniOn power Inc. All rights reserved.

Step 16 – Initial Start Up

1. Verify that AC and DC connections are complete and secure.
2. Turn on AC input breakers.
3. If there are no alarms, make required adjustments to the default settings on the controller for this installation.

NOTE: Battery configuration is automatically performed by the system controller. Generally, only alarm specific thresholds and assignments are customized.

Battery modules are connected automatically to the DC system bus based on the battery Low Voltage Disconnect Reconnect voltage threshold. There is no need to manually operate disconnect and reconnect features of the battery. The VRLA batteries utilize an internal contactor that can audibly be heard when connected or disconnected. NiMH and Naion batteries will not be heard due to solid state disconnect/ reconnect implementations.

Step 16A – Initial Start Up for Equipment Loads

1. With rectifiers On, charged batteries on the same bus, and all PDU load breakers in the Off (Open) position on that bus, Turn - On (Close) the first DC load breaker to the equipment to apply power.
2. Wait approximately 35 - 45 seconds.
3. Turn-On (Close) the breaker to the next load residing on the same DC bus.
4. Again, Wait approximately 35 - 45 seconds before the next breaker is turned on.

Repeat steps (3) and (4) until all loads are turned on.

NOTE: The Edge Distributed Power Architecture system utilizes an over-voltage / over-current protection feature to protect the plant and system loads against out of range operating conditions. Some loads during start up draw many times their normal operating current. The instantaneous powering of these type of loads in succession with the delay between turn-on can cause the protection system to shutdown to protect the system. If you experience a rectifier fail condition after turning on a DC load breaker, go to the controller and send the restart command. From the front panel of the controller, press <CONTROL/OPERATIONS>, then press <RESTART DEVICES>.

Figure 40 Front Panel Of controller

2023 OmniOn power Inc. All rights reserved.

Step 17 – Configure Controller per Galaxy Pulsar Edge Controller Quick Start Guide #CC848815341)

Verify and edit these controller basic configuration parameters per site engineering instructions.

1. System Date, System Time
2. Site ID, Site Description
3. DHCP / Static IP Address

NOTE: The Galaxy Pulsar Edge Controller Quick Start Guide includes steps and information that are not applicable to this system.

Ordering Information

Reference Document:

- Edge Distributed Power Ordering Guide

Customer Service and Technical Support Contact Information

Email: epis.IDCP-techsupport@omnion.com
Web site: https://electrification.us.omnion.com/products/dc-power-systems

For material availability, order status, shipping info, missing or damaged materials, please contact Customer Service.

For equipment failures, troubleshooting or other technical issues, contact Technical Support 24/7 Phone: 1.877.546.3243 option 1, 2 for Customer Service.

2023 OmniOn power Inc. All rights reserved.

Page intentionally left blank

2023 OmniOn power Inc. All rights reserved.

OmniOn Power Inc.
601 Shiloh Rd.
Plano, TX USA

omnionpower.com

We reserve the right to make technical changes or modify the contents of this document without prior notice. OmniOn Power does not accept any responsibility for errors or lack of information in this document and makes no warranty with respect to and assumes no liability as a result of any use of information in this document.

We reserve all rights in this document and in the subject matter and illustrations contained therein. Any reproduction, disclosure to third parties or utilization of its contents – in whole or in parts – is forbidden without prior written consent of OmniOn Power. This document does not convey license to any patent or any intellectual property right. Copyright© 2023 OmniOn Power Inc. All rights reserved.